ALLIED MACHINE & ENGINEERING

Holemaking Solutions for Today's Manufacturing

Drilling

Boring

Reaming

Burnishing

AccuThread™ T3

THREADING

Solid Carbide Thread Mills

Specials

North America

Allied Machine
120 Deeds Drive
Dover, OH 44622
United States

Allied Machine
485 West 3rd Street
Dover, OH 44622
United States

ThreadMills USA™
4185 Crosstowne Ct #B
Evans, GA 30809
United States

Superion™
1285 S Patton St.
Xenia, OH 45385
United States

Europe

Allied Machine Europe
93 Vantage Point
Pensnett Estate
Kingswinford
West Midlands
DY6 7FR, United Kingdom

Wohlhaupter® GmbH
Maybachstrasse 4
Postfach 1264
72636 Frickenhausen
Germany

Asia

Wohlhaupter® India
B-23, 2nd Floor
B Block Community Centre
Janakpuri, New Delhi - 110058
India

Allied Machine & Engineering is a worldwide leader in holemaking and finishing solutions. We are committed to providing practical and dependable solutions to our customers through innovative designs and superior customer and technical support.

We continue to expand our product offering in order to provide new and different solutions. With Field Sales Engineers located around the world, we position ourselves to provide technical support on site, right at your spindle.

ALLIED MACHINE & ENGINEERING®

www.alliedmachine.com

The Foundation

Since 1941, Allied Machine & Engineering has provided dependable and practical holemaking solutions to the world. What was once a small job shop in Ohio is now a worldwide leader in cutting tool technology. With three manufacturing facilities in Ohio, one in Georgia, another in Germany, and headquarters in both the United States and Europe, Allied Machine is positioned to bring innovative solutions and technical expertise directly to the customers' hands.

The Beginning

Harold E. Stokey founded Allied Machine & Engineering to aid the war effort, manufacturing taper bearing lock nuts for the production of M1 tanks. Years later, after a sales meeting gone wrong, Stokey possessed a warehouse stocked with spade drill inserts. He set forth into the industry that would become Allied Machine's thriving identity: holemaking.

The T-A®

When Harold's son, William H. Stokey, became the president and CEO, he developed the Throw Away, or T-A, spade drill insert system. The T-A revolutionized the holemaking industry, launching Allied Machine ahead of the competition. Since then, numerous innovations and advancements have been created from the T-A's inspiration.

The Innovation

Since the development of the T-A, Allied Machine has expanded its product offering to support a vast range of customer applications, including large diameter and deep hole drilling, boring, reaming, burnishing, porting, and threading.

The People

Allied Machine understands that high quality products are only one facet of success. Our customer support is crucial to what we do, and that's why we make sure the best engineers and customer service associates are in place to assist our customers around the world.

The Future

With over 75 years of experience, Allied Machine has encountered the challenges of growth and success. By investing in cutting edge technology and the brightest and sharpest minds, our knowledge and capabilities continue to expand and grow every day.

Steve Stokey
Executive Vice President

William H. Stokey
President and CEO

Mike Stokey
Executive Vice President

ALLIED MACHINE & ENGINEERING®

Holemaking Solutions for Today's Manufacturing

WOHLHAUPTER®

ThreadMills USA™

SUPERION™

CRITERION™

OTHER THREADING **SOLUTIONS**

AccuThread™ 856

Solid Carbide

Bolt-in Style Replaceable Inserts

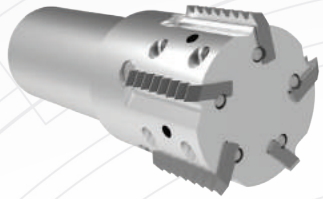

Pin Style Replaceable Inserts

ThreadMills USA™

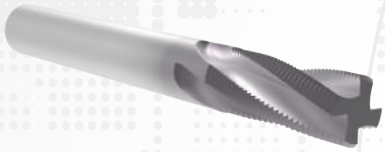

Solid Carbide

Coolant Through Solid Carbide

visit **www.alliedmachine.com** to see more

AccuThread™ T3 | Solid Carbide Thread Mills

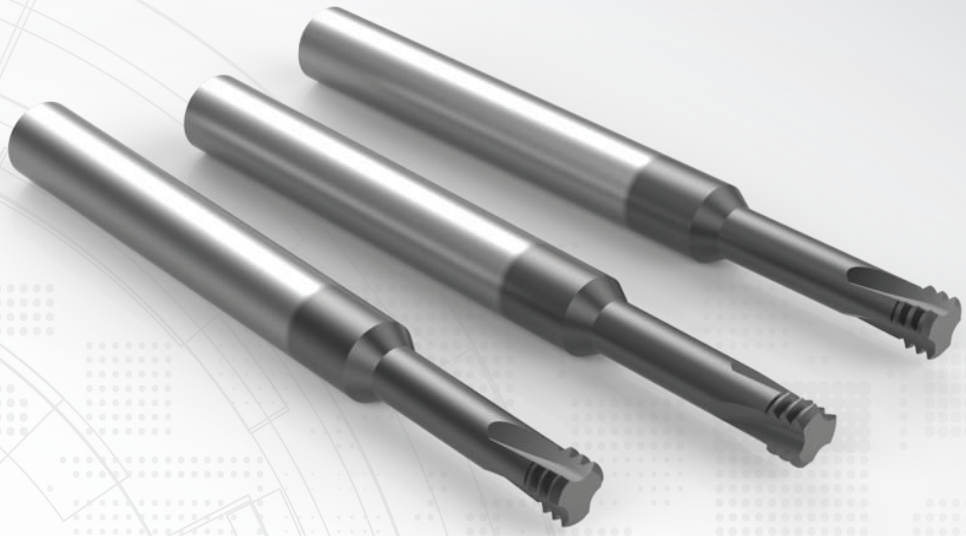

Hard Materials Just Got Easy

Allied Machine's thread milling program has developed into a comprehensive range of high precision tooling that offers outstanding productivity with exceptional levels of tool life and thread accuracy. The thread mill range covers both solid carbide and indexable replaceable insert tools offering an extensive range of thread forms.

The AccuThread T3 is built for machining hardened or hard-to-machine materials such as stainless steel, tool steel, and high-temp alloys. It is designed to machine only three threads at a time, reducing tool pressure and dramatically increasing the chances of tool survival.

Reference Icons
The following icons will appear throughout the catalog to help you navigate between products.

Setup / Assembly Information
Detailed instructions and information regarding the corresponding part(s)

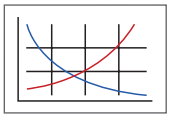

Recommended Cutting Data
Speed and feed recommendations for optimum and safe threading

AccuThread™ T3 Contents

Introduction Information

Online Tools: Insta-Code™ 2

Product Overview and Nomenclature 3

Solid Carbide Thread Mills

UN Thread Form . . . . . 4 - 5

ISO Thread Form . . . . . 6 - 7

Recommended Cutting Data . . . . . 8 - 9

Technical Information 10

Online Tools

Insta-Code™

Find your thread mill. Create your program.

PC DOWNLOAD

ONLINE WEB APP

The all new software lets you choose the best thread mill product for your application and create the program code for your machine. Insta-Code is available as a PC download app (that can be used offline) and an online web app available 24/7 at www.alliedmachine.com/InstaCode.

Eliminate the wait. Get your program now.

Insta-Code also has a **Cycle Time Calculator**

Online Version

- Generates thread mill G-code programs
- Available online 24/7
- No log-in required
- No updates needed
- Easily share the program code
- Supported on all web browsers

Download Version

- Creates program code for multiple machine platforms
- Suggests a thread mill based on application details
- Provides estimated cycle time for improved production
- Available for use offline

Offline Version Updates

- Update your offline Insta-Code software
- Download the updated .zip file, then transfer to the offline computer. Click "check for update" in your Insta-Code software and navigate to the downloaded .zip file
- This allows you to keep all your saved programs

1. Download and open **Allied_Machine_Insta-Code.zip**
2. Click on **setup.exe** to install the program
3. **One click updates** are available for online computers

Supported on all Windows OS

www.alliedmachine.com/InstaCode

AccuThread T3 Overview and Nomenclature

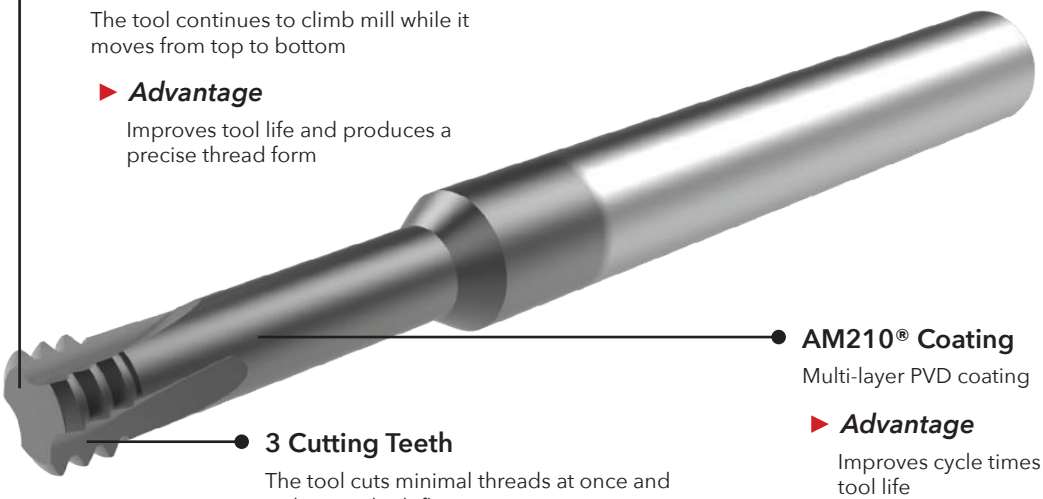

Left Hand Cutting

The tool continues to climb mill while it moves from top to bottom

▶ ***Advantage***

Improves tool life and produces a precise thread form

AM210® Coating

Multi-layer PVD coating

▶ ***Advantage***

Improves cycle times and tool life

3 Cutting Teeth

The tool cuts minimal threads at once and reduces side deflection

▶ ***Advantage***

Cuts harder materials, and produces deeper threads than a standard thread mill

Additional Information

- Available in UN and ISO thread forms
- Available in imperial and metric shanks
- Available in 2xD and 3xD lengths

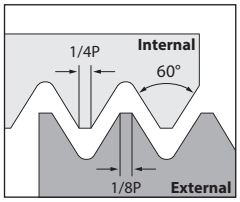

UN Thread Form

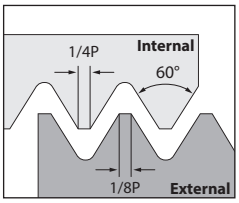

ISO Thread Form

AccuThread T3 Solid Carbide Thread Mills

TM	073	64	M	–	3T	2X
1	2	3	4		5	6

1. Thread Mill	2. Min Thread Diameter	3. Pitch	4. Shank	5. Style	6. Depth to Diameter Ratio
TM = Standard	**250** = 1/4 (English) **45** = M4.5 (Metric)	**20** = UN 20 TPI **075** = Metric 0.75	**Blank** = Imperial **M** = Metric	**3T** = 3 tooth	**2X** = 2xD **3X** = 3xD

Reference Key

Symbol	Attribute
D_1	Maximum cutter diameter
D_2	Shank diameter
D_3	Undercut diameter
L_1	Overall length
L_6	Length of cut

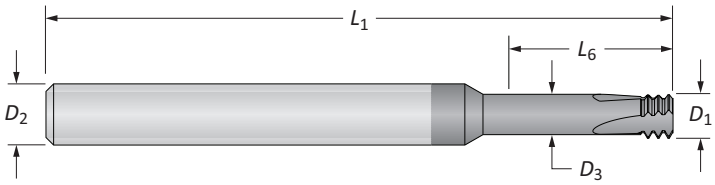

A DRILLING
B BORING
C REAMING
D BURNISHING
E THREADING
X SPECIALS

Solid Carbide Thread Mills

UN | 2xD

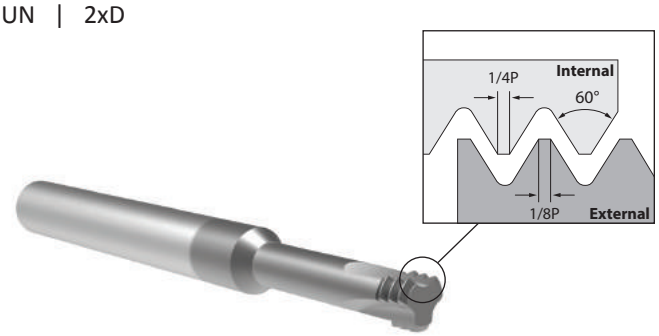

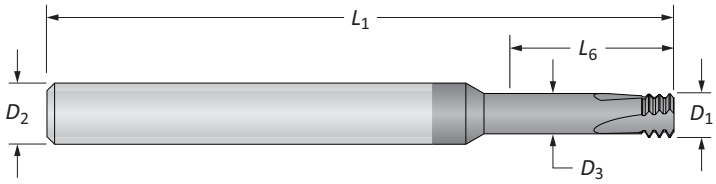

UN | Non-Coolant

	TPI (Pitch)	Min Thread Ø	Flutes	Thread Mill D_1	D_3	D_2	L_6	L_1	Part No. AccuThread T3
i	64	#1	3	0.055	0.035	0.250	0.150	2.500	**TM07364-3T2X**
	56	#2	3	0.065	0.042	0.250	0.170	2.500	**TM08656-3T2X**
	48	#3	3	0.075	0.049	0.250	0.200	2.500	**TM09948-3T2X**
	40	#4	3	0.085	0.054	0.250	0.250	2.500	**TM11240-3T2X**
	36	#8	3	0.130	0.095	0.250	0.350	2.500	**TM16436-3T2X**
	32	#6	3	0.100	0.061	0.250	0.280	2.500	**TM13832-3T2X**
	32	#8	3	0.126	0.087	0.250	0.370	2.500	**TM16432-3T2X**
	32	#10	3	0.145	0.106	0.250	0.410	2.500	**TM19032-3T2X**
	28	1/4	3	0.197	0.153	0.250	0.570	2.500	**TM25028-3T2X**
	24	#10	3	0.138	0.086	0.250	0.420	2.500	**TM19024-3T2X**
	24	5/16	3	0.260	0.208	0.312	0.670	2.500	**TM31224-3T2X**
	20	1/4	3	0.187	0.125	0.250	0.550	2.500	**TM25020-3T2X**
	20	7/16	4	0.312	0.250	0.312	0.980	2.500	**TM43720-3T2X**
	18	5/16	3	0.236	0.168	0.250	0.670	2.500	**TM31218-3T2X**
	16	3/8	3	0.264	0.187	0.312	0.870	2.500	**TM37516-3T2X**
	14	7/16	4	0.300	0.212	0.312	0.980	2.500	**TM43714-3T2X**
	13	1/2	4	0.360	0.266	0.375	1.080	3.000	**TM50013-3T2X**
	12	9/16	4	0.410	0.308	0.500	1.240	3.500	**TM56212-3T2X**
m	64	#1	3	1.40	0.89	6.00	3.81	63.00	**TM07364M-3T2X**
	56	#2	3	1.65	1.08	6.00	4.32	63.00	**TM08656M-3T2X**
	48	#3	3	1.91	1.24	6.00	5.08	63.00	**TM09948M-3T2X**
	40	#4	3	2.16	1.36	6.00	6.35	63.00	**TM11240M-3T2X**
	36	#8	3	3.30	2.42	6.00	8.89	63.00	**TM16436M-3T2X**
	32	#6	3	2.54	1.55	6.00	7.11	63.00	**TM13832M-3T2X**
	32	#8	3	3.20	2.21	6.00	9.40	63.00	**TM16432M-3T2X**
	32	#10	3	3.68	2.70	6.00	10.41	63.00	**TM19032M-3T2X**
	28	1/4	3	5.00	3.88	6.00	14.48	63.00	**TM25028M-3T2X**
	24	#10	3	3.51	2.20	6.00	10.67	63.00	**TM19024M-3T2X**
	24	5/16	3	6.60	5.30	8.00	17.02	64.00	**TM31224M-3T2X**
	20	1/4	3	4.75	3.18	6.00	13.97	63.00	**TM25020M-3T2X**
	20	7/16	4	7.92	6.36	8.00	24.89	64.00	**TM43720M-3T2X**
	18	5/16	3	5.94	4.26	6.00	17.02	63.00	**TM31218M-3T2X**
	16	3/8	3	6.71	4.76	8.00	22.10	64.00	**TM37516M-3T2X**
	14	7/16	4	7.62	5.39	8.00	24.89	64.00	**TM43714M-3T2X**

E: 8 - 9
Key on E: 1
E: 10

i = Imperial (in)
m = Metric (mm)

Solid Carbide Thread Mills

UN | 3xD

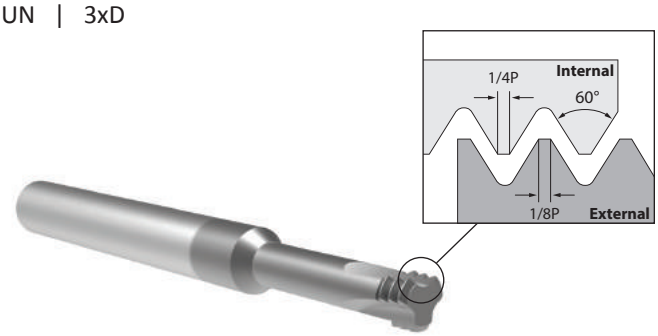

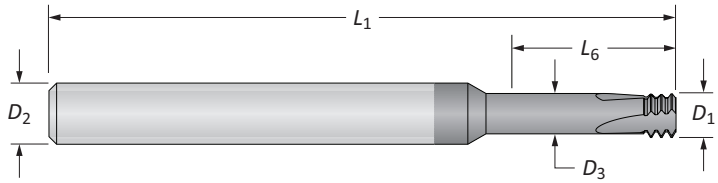

UN | Non-Coolant

	TPI (Pitch)	Min Thread Ø	Flutes	Thread Mill D_1	D_3	D_2	L_6	L_1	Part No. AccuThread T3
i	40	#4	3	0.085	0.054	0.250	0.310	2.500	**TM11240-3T3X**
	32	#6	3	0.100	0.061	0.250	0.410	2.500	**TM13832-3T3X**
	32	#10	3	0.145	0.106	0.250	0.590	2.500	**TM19032-3T3X**
	28	1/4	3	0.197	0.153	0.250	0.750	2.500	**TM25028-3T3X**
	24	#10	3	0.138	0.086	0.250	0.590	2.500	**TM19024-3T3X**
	24	5/16	3	0.260	0.208	0.312	0.940	2.500	**TM31224-3T3X**
	20	1/4	3	0.187	0.125	0.250	0.750	2.500	**TM25020-3T3X**
	18	5/16	3	0.236	0.168	0.250	0.910	2.500	**TM31218-3T3X**
m	40	#4	3	2.16	1.36	6.00	7.87	63.00	**TM11240M-3T3X**
	32	#6	3	2.54	1.55	6.00	10.41	63.00	**TM13832M-3T3X**
	32	#10	3	3.68	2.70	6.00	14.99	63.00	**TM19032M-3T3X**
	28	1/4	3	5.00	3.88	6.00	19.05	63.00	**TM25028M-3T3X**
	24	#10	3	3.51	2.20	6.00	14.99	63.00	**TM19024M-3T3X**
	24	5/16	3	6.60	5.30	8.00	23.88	64.00	**TM31224M-3T3X**
	20	1/4	3	4.75	3.18	6.00	19.05	63.00	**TM25020M-3T3X**
	18	5/16	3	5.94	4.21	6.00	23.11	63.00	**TM31218M-3T3X**

E: 8 - 9
Key on E: 1
E: 10

i = Imperial (in)
m = Metric (mm)

Solid Carbide Thread Mills

ISO | 2xD

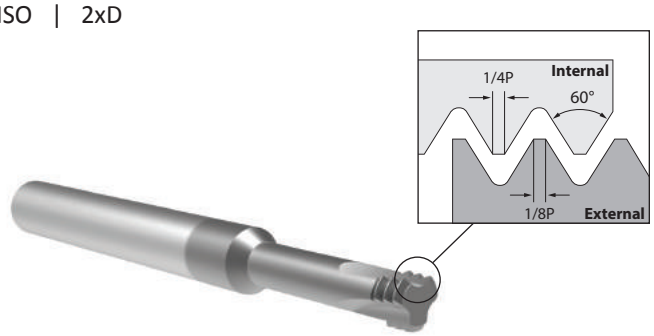

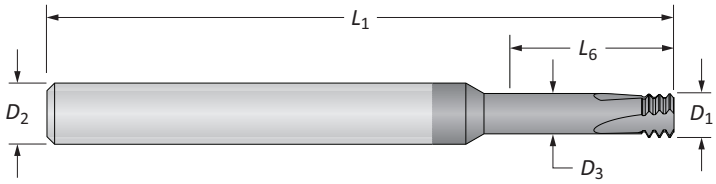

ISO | Non-Coolant

	Pitch	Min Thread Ø	Flutes	Thread Mill D_1	D_3	D_2	L_6	L_1	Part No. AccuThread T3
i	0.40	M2	3	0.061	0.041	0.250	0.180	2.500	**TM20040-3T2X**
	0.45	M2.5	3	0.077	0.055	0.250	0.220	2.500	**TM25045-3T2X**
	0.50	M3	3	0.093	0.068	0.250	0.260	2.500	**TM30050-3T2X**
	0.60	M3.5	3	0.108	0.078	0.250	0.300	2.500	**TM35060-3T2X**
	0.70	M4	3	0.122	0.088	0.250	0.350	2.500	**TM40070-3T2X**
	0.80	M5	3	0.150	0.111	0.250	0.490	2.500	**TM50080-3T2X**
	1.00	M6	3	0.183	0.134	0.250	0.550	2.500	**TM60100-3T2X**
	1.25	M8	3	0.234	0.173	0.250	0.710	2.500	**TM80125-3T2X**
	1.50	M10	4	0.307	0.234	0.312	0.910	2.500	**TM10150-3T2X**
	1.75	M12	4	0.310	0.225	0.312	0.945	2.500	**TM12175-3T2X**
m	0.40	M2	3	1.55	1.04	6.00	4.60	63.00	**TM20040M-3T2X**
	0.45	M2.5	3	1.96	1.38	6.00	5.60	63.00	**TM25045M-3T2X**
	0.50	M3	3	2.36	1.73	6.00	6.60	63.00	**TM30050M-3T2X**
	0.60	M3.5	3	2.74	1.99	6.00	7.60	63.00	**TM35060M-3T2X**
	0.70	M4	3	3.10	2.22	6.00	8.90	63.00	**TM40070M-3T2X**
	0.80	M5	3	3.81	2.81	6.00	12.40	63.00	**TM50080M-3T2X**
	1.00	M6	3	4.65	3.41	6.00	14.00	63.00	**TM60100M-3T2X**
	1.25	M8	3	5.94	4.40	6.00	18.00	63.00	**TM80125M-3T2X**
	1.50	M10	4	7.80	5.95	8.00	23.10	64.00	**TM10150M-3T2X**
	1.75	M12	4	7.92	5.78	8.00	24.00	64.00	**TM12175M-3T2X**

E: 8 - 9
Key on E: 1
E: 10

i = Imperial (in)
m = Metric (mm)

Solid Carbide Thread Mills

ISO | 3xD

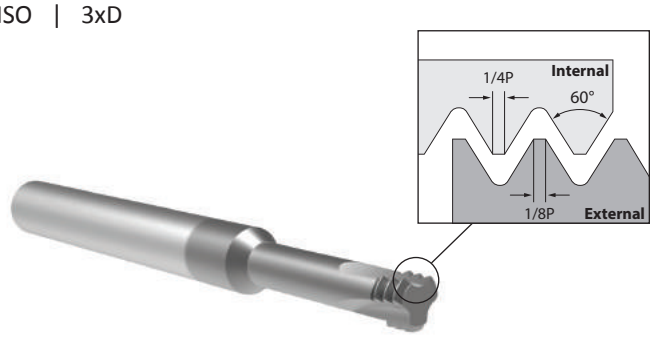

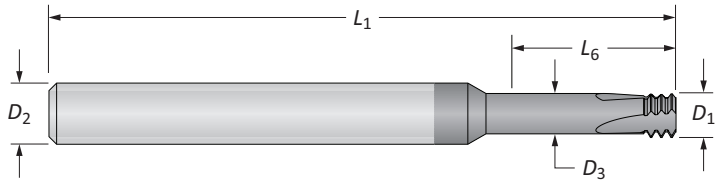

ISO | Non-Coolant

	Pitch	Min Thread Ø	Flutes	Thread Mill D_1	D_3	D_2	L_6	L_1	Part No. AccuThread T3
i	0.45	M2.5	3	0.077	0.055	0.250	0.300	2.500	**TM25045-3T3X**
	0.50	M3	3	0.093	0.068	0.250	0.370	2.500	**TM30050-3T3X**
	0.60	M3.5	3	0.108	0.078	0.250	0.450	2.500	**TM35060-3T3X**
	0.70	M4	3	0.122	0.088	0.250	0.490	2.500	**TM40070-3T3X**
	0.80	M5	3	0.150	0.111	0.250	0.630	2.500	**TM50080-3T3X**
	1.00	M6	3	0.183	0.134	0.250	0.790	2.500	**TM60100-3T3X**
	1.25	M8	3	0.234	0.173	0.250	0.940	2.500	**TM80125-3T3X**
	1.50	M10	4	0.307	0.234	0.312	1.120	2.500	**TM10150-3T3X**
	1.75	M12	4	0.310	0.225	0.312	1.418	2.500	**TM12175-3T3X**
m	0.45	M2.5	3	1.96	1.38	6.00	7.60	63.00	**TM25045M-3T3X**
	0.50	M3	3	2.36	1.73	6.00	9.40	63.00	**TM30050M-3T3X**
	0.60	M3.5	3	2.74	1.99	6.00	11.40	63.00	**TM35060M-3T3X**
	0.70	M4	3	3.10	2.22	6.00	12.40	63.00	**TM40070M-3T3X**
	0.80	M5	3	3.81	2.81	6.00	16.00	63.00	**TM50080M-3T3X**
	1.00	M6	3	4.65	3.41	6.00	20.10	63.00	**TM60100M-3T3X**
	1.25	M8	3	5.94	4.40	6.00	23.90	63.00	**TM80125M-3T3X**
	1.50	M10	4	7.80	5.95	8.00	28.40	64.00	**TM10150M-3T3X**
	1.75	M12	4	7.92	5.78	8.00	36.00	64.00	**TM12175M-3T3X**

E: 8 - 9
Key on E: 1
E: 10

i = Imperial (in)
m = Metric (mm)

Recommended Cutting Data | Imperial (inch)

Solid Carbide | AccuThread™ T3

ISO	Material	Hardness (BHN)	Speed (SFM)	Chipload per Tooth (IPT) by Cutter Diameter					
				0.055 to 0.125	0.126 to 0.188	0.189 to 0.250	0.251 to 0.312	0.313 to 0.375	0.376 to 0.500
P	**Free Machining Steel** 1118, 1215, 12L14, etc.	100 - 150	375	0.0008	0.0010	0.0014	0.0018	0.0020	0.0030
		150 - 200	275	0.0008	0.0010	0.0014	0.0018	0.0020	0.0030
		200 - 250	225	0.0008	0.0010	0.0014	0.0018	0.0020	0.0030
	Low Carbon Steel 1010, 1020, 1025, 1522, 1144, etc.	85 - 125	375	0.0008	0.0010	0.0014	0.0018	0.0020	0.0030
		125 - 175	275	0.0008	0.0010	0.0014	0.0018	0.0020	0.0030
		175 - 225	225	0.0008	0.0010	0.0014	0.0018	0.0020	0.0030
		225 - 275	200	0.0008	0.0010	0.0014	0.0018	0.0020	0.0030
	Medium Carbon Steel 1030, 1040, 1050, 1527, 1140, 1151, etc.	125 - 175	225	0.0008	0.0010	0.0012	0.0016	0.0020	0.0026
		175 - 225	200	0.0008	0.0010	0.0012	0.0016	0.0020	0.0026
		225 - 275	175	0.0008	0.0010	0.0012	0.0016	0.0020	0.0026
		275 - 325	150	0.0008	0.0010	0.0012	0.0016	0.0020	0.0026
	Alloy Steel 4140, 5140, 8640, etc.	125 - 175	225	0.0008	0.0010	0.0012	0.0016	0.0020	0.0026
		175 - 225	200	0.0008	0.0010	0.0012	0.0016	0.0020	0.0026
		225 - 275	175	0.0008	0.0010	0.0012	0.0016	0.0020	0.0026
		275 - 325	150	0.0008	0.0010	0.0012	0.0016	0.0020	0.0026
		325 - 375	125	0.0008	0.0010	0.0012	0.0016	0.0020	0.0026
	High Strength Alloy 4340, 4330V, 300M, etc.	225 - 300	175	0.0008	0.0010	0.0012	0.0016	0.0020	0.0026
		300 - 350	150	0.0008	0.0010	0.0012	0.0016	0.0020	0.0026
		350 - 400	125	0.0008	0.0010	0.0012	0.0016	0.0020	0.0026
	Structural Steel A36, A285, A516, etc.	100 - 150	225	0.0008	0.0010	0.0014	0.0018	0.0020	0.0030
		150 - 250	200	0.0008	0.0010	0.0014	0.0018	0.0020	0.0030
		250 - 350	150	0.0008	0.0010	0.0014	0.0018	0.0020	0.0030
	Tool Steel H-13, H-21, A-4, 0-2, S-3, etc.	150 - 200	175	0.0008	0.0010	0.0012	0.0016	0.0020	0.0026
		200 - 250	125	0.0008	0.0010	0.0012	0.0016	0.0020	0.0026
S	**High Temp Alloy** Hastelloy B, Inconel 600, etc.	140 - 220	100	0.0006	0.0008	0.0012	0.0016	0.0018	0.0020
		220 - 310	75	0.0006	0.0008	0.0012	0.0016	0.0018	0.0020
	Titanium Alloy	140 - 220	100	0.0006	0.0008	0.0012	0.0016	0.0018	0.0020
		220 - 310	75	0.0006	0.0008	0.0012	0.0016	0.0018	0.0020
	Aerospace Alloy S82	185 - 275	100	0.0006	0.0008	0.0012	0.0016	0.0018	0.0020
		275 - 350	75	0.0006	0.0008	0.0012	0.0016	0.0018	0.0020
M	**Stainless Steel** 416, 420, etc.	185 - 275	225	0.0008	0.0010	0.0012	0.0016	0.0018	0.0020
		275 - 350	200	0.0008	0.0010	0.0012	0.0016	0.0018	0.0020
	Stainless Steel 300 Series 304, 316, 17-4PH, etc.	135 - 185	125	0.0008	0.0010	0.0012	0.0016	0.0018	0.0020
		185 - 275	75	0.0008	0.0010	0.0012	0.0016	0.0018	0.0020
	Super Duplex Stainless Steel	135 - 185	125	0.0006	0.0008	0.0012	0.0016	0.0018	0.0020
		185 - 275	75	0.0006	0.0008	0.0012	0.0016	0.0018	0.0020
H	**Hardened Steels**	450 - 500	175	0.0006	0.0008	0.0012	0.0016	0.0018	0.0020
		500 - 550	125	0.0006	0.0008	0.0012	0.0016	0.0018	0.0020
K	**Cast Iron** Grey, Ductile, Nodular	120 - 150	275	0.0008	0.0010	0.0014	0.0018	0.0020	0.0030
		150 - 200	250	0.0008	0.0010	0.0014	0.0018	0.0020	0.0030
		200 - 220	225	0.0008	0.0010	0.0014	0.0018	0.0020	0.0030
		220 - 260	200	0.0008	0.0010	0.0014	0.0018	0.0020	0.0030
		260 - 320	200	0.0008	0.0010	0.0014	0.0018	0.0020	0.0030
N	**Wrought Aluminum**	30	500	0.0010	0.0012	0.0018	0.0020	0.0030	0.0040
		180	450	0.0010	0.0012	0.0018	0.0020	0.0030	0.0040
	Cast Aluminum	30 - 180	250	0.0010	0.0012	0.0018	0.0020	0.0030	0.0040
	Brass	30 - 100	500	0.0010	0.0012	0.0018	0.0020	0.0030	0.0040

Recommended Cutting Data | Metric (mm)

Solid Carbide | AccuThread™ T3

ISO	Material	Hardness (BHN)	Speed (M/min)	Chipload per Tooth (mm/tooth) by Cutter Diameter 1.40 to 3.17	3.18 to 4.77	4.78 to 6.35	6.36 to 7.92
P	**Free Machining Steel** 1118, 1215, 12L14, etc.	100 - 150	115	0.020	0.025	0.035	0.045
		150 - 200	85	0.020	0.025	0.035	0.045
		200 - 250	70	0.020	0.025	0.035	0.045
	Low Carbon Steel 1010, 1020, 1025, 1522, 1144, etc.	85 - 125	115	0.020	0.025	0.035	0.045
		125 - 175	85	0.020	0.025	0.035	0.045
		175 - 225	70	0.020	0.025	0.035	0.045
		225 - 275	60	0.020	0.025	0.035	0.045
	Medium Carbon Steel 1030, 1040, 1050, 1527, 1140, 1151, etc.	125 - 175	70	0.020	0.025	0.030	0.040
		175 - 225	60	0.020	0.025	0.030	0.040
		225 - 275	50	0.020	0.025	0.030	0.040
		275 - 325	45	0.020	0.025	0.030	0.040
	Alloy Steel 4140, 5140, 8640, etc.	125 - 175	70	0.020	0.025	0.030	0.040
		175 - 225	60	0.020	0.025	0.030	0.040
		225 - 275	50	0.020	0.025	0.030	0.040
		275 - 325	45	0.020	0.025	0.030	0.040
		325 - 375	38	0.020	0.025	0.030	0.040
	High Strength Alloy 4340, 4330V, 300M, etc.	225 - 300	50	0.020	0.025	0.030	0.040
		300 - 350	45	0.020	0.025	0.030	0.040
		350 - 400	38	0.020	0.025	0.030	0.040
	Structural Steel A36, A285, A516, etc.	100 - 150	70	0.020	0.025	0.035	0.045
		150 - 250	60	0.020	0.025	0.035	0.045
		250 - 350	45	0.020	0.025	0.035	0.045
	Tool Steel H-13, H-21, A-4, 0-2, S-3, etc.	150 - 200	50	0.020	0.025	0.030	0.040
		200 - 250	38	0.020	0.025	0.030	0.040
S	**High Temp Alloy** Hastelloy B, Inconel 600, etc.	140 - 220	30	0.015	0.020	0.030	0.040
		220 - 310	23	0.015	0.020	0.030	0.040
	Titanium Alloy	140 - 220	30	0.015	0.020	0.030	0.040
		220 - 310	23	0.015	0.020	0.030	0.040
	Aerospace Alloy S82	185 - 275	30	0.015	0.020	0.030	0.040
		275 - 350	23	0.015	0.020	0.030	0.040
M	**Stainless Steel** 416, 420, etc.	185 - 275	70	0.020	0.025	0.030	0.040
		275 - 350	60	0.020	0.025	0.030	0.040
	Stainless Steel 300 Series 304, 316, 17-4PH, etc.	135 - 185	38	0.020	0.025	0.030	0.040
		185 - 275	23	0.020	0.025	0.030	0.040
	Super Duplex Stainless Steel	135 - 185	38	0.015	0.020	0.030	0.040
		185 - 275	23	0.015	0.020	0.030	0.040
H	**Hardened Steels**	450 - 500	50	0.015	0.020	0.030	0.040
		500 - 550	38	0.015	0.020	0.030	0.040
K	**Cast Iron** Grey, Ductile, Nodular	120 - 150	85	0.020	0.025	0.035	0.045
		150 - 200	75	0.020	0.025	0.035	0.045
		200 - 220	70	0.020	0.025	0.035	0.045
		220 - 260	60	0.020	0.025	0.035	0.045
		260 - 320	60	0.020	0.025	0.035	0.045
N	**Wrought Aluminum**	30	150	0.025	0.030	0.045	0.050
		180	135	0.025	0.030	0.045	0.050
	Cast Aluminum	30 - 180	75	0.025	0.030	0.045	0.050
	Brass	30 - 100	150	0.025	0.030	0.045	0.050

Technical Information

Spindle Rotation

Tools are left hand cutting. The left hand cut allows the tool to climb mill when creating a right hand thread with an AccuThread T3. Climb milling reduces deflection and heat generated during the cut.

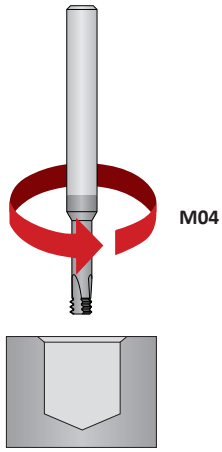

Direction of Helical Interpolation

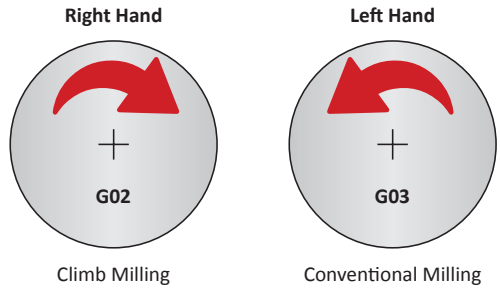

Programming Z-Axis Cutting Path

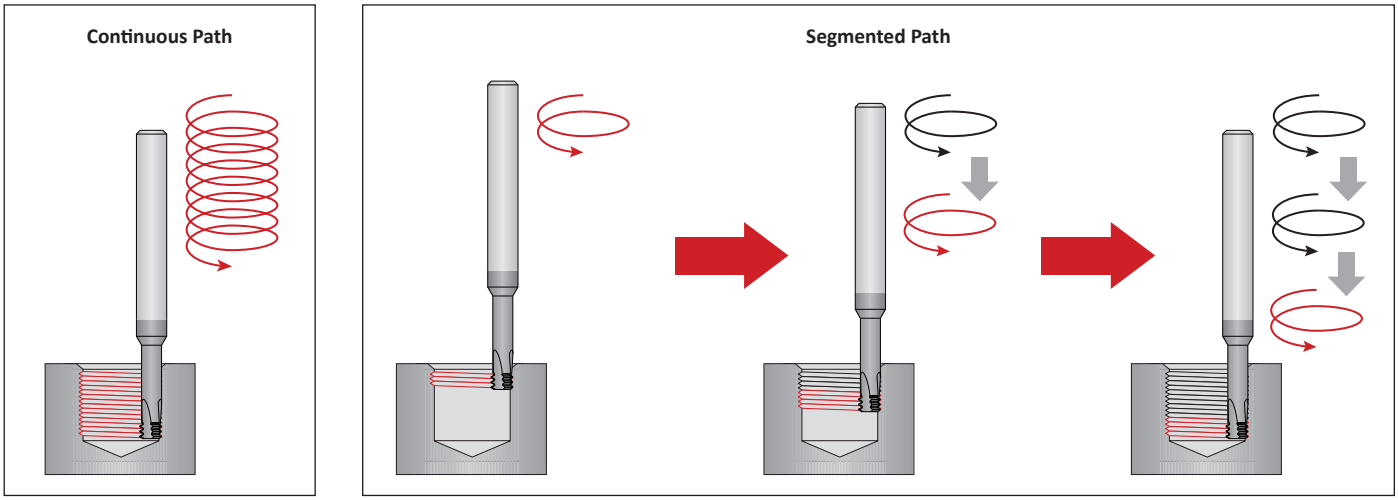

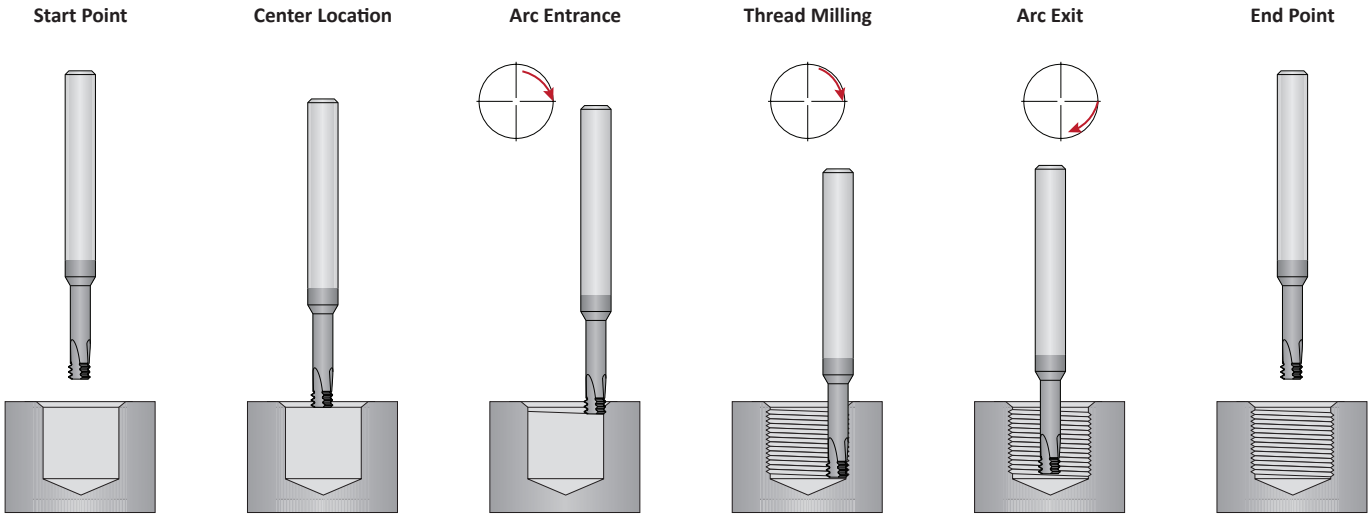

Warranty Information

Allied Machine & Engineering warrants to original equipment manufacturers, distributors, industrial and commercial users of its products that each new product manufactured or supplied by Allied Machine shall be free from defects in material and workmanship.

Allied Machine's obligation under this warranty is limited to furnishing without additional charge a replacement or, at its option repairing or issuing credit for any product which shall within one year from the date of sale be returned freight prepaid to the plant designated by an Allied Machine representative and which upon inspection is determined by Allied Machine to be defective in materials or workmanship.

Complete information as to operating conditions, machine, set-up, and application of cutting fluid should accompany any product returned for inspection. The provisions of this warranty shall not apply to any Allied Machine products which have been subjected to misuse, improper operating conditions, machine set-up or application of cutting fluid or which have been repaired or altered if such repair or alteration in the judgment of Allied Machine would adversely affect performance of the product.

THIS WARRANTY IS IN LIEU OF ALL OTHER WARRANTIES, EXPRESS OR IMPLIED, INCLUDING ANY IMPLIED WARRANTY OF MERCHANTABILITY OR FITNESS FOR A PARTICULAR PURPOSE. Allied Machine shall have no liability or responsibility on any claim of any kind, whether in contract, tort or otherwise, for any loss or damage arising out of, connected with, or resulting from the manufacture, sale, delivery or use of any product sold hereunder, in excess of the cost of replacement or repair as provided herein.

ALL PRICES, DELIVERIES, DESIGNS, AND MATERIALS ARE SUBJECT TO CHANGE WITHOUT NOTICE.

Allied Machine & Engineering
Registered to ISO 9001
10001329

United States

Allied Machine & Engineering
120 Deeds Drive
Dover OH 44622
United States

Phone:
+1.330.343.4283

Fax:
+1.330.602.3400

Toll Free USA and Canada:
800.321.5537

Toll Free USA and Canada:
800.223.5140

Allied Machine & Engineering
485 W Third Street
Dover OH 44622
United States

Phone:
+1.330.343.4283

Fax:
+1.330.364.7666
(Engineering Dept.)

Toll Free USA and Canada:
800.321.5537

Europe

Allied Machine & Engineering Co. (Europe) Ltd.
93 Vantage Point
Pensnett Estate
Kingswinford
West Midlands
DY6 7FR England

Phone:
+44 (0) 1384.400900

Wohlhaupter GmbH
Maybachstrasse 4
Postfach 1264
72636 Frickenhausen
Germany

Phone:
+49 (0) 7022.408.0

Fax:
+49 (0) 7022.408.212

Asia

Wohlhaupter India Pvt. Ltd.
B-23, 2nd Floor
B Block Community Centre
Janakpuri, New Delhi - 110058
India

Phone:
+91 (0) 11.41827044

Your local Allied Machine representative:

ALLIED MACHINE & ENGINEERING

www.alliedmachine.com

Allied Machine & Engineering is registered by DQS to **ISO 9001 10001329**

© 2017 Allied Machine & Engineering
Literature Order Number: E-AT3
Publish Date: November 2017